ALL PRODUCT DIMENSIONS ARE BEFORE COATING

MATERIAL SPECIFICATION

END RING (Part 1)
Ductile Iron to BS EN1563
SYMBOL EN-GJS-450-10

CENTRE SLEEVE (Part 2)
Steel to BS EN10255 or
Steel to BS EN10025-2 Grade S275JR

GASKET (Part 3)
EPDM to BS EN 681-1,TYPE WA,WC
NITRILE to BS EN 681-1,TYPE WA,WC,WG
or BS EN 682,TYPE G

BOLTS (Part 4)
Steel to
BS EN ISO898-1:Property Class 4.8

NUTS (Part 5)
Steel to BS4190:Grade 4

WASHERS (Part 6)
Stainless Steel to BS1449:Part 2
Grade 304S15

FINISH SPECIFICATION

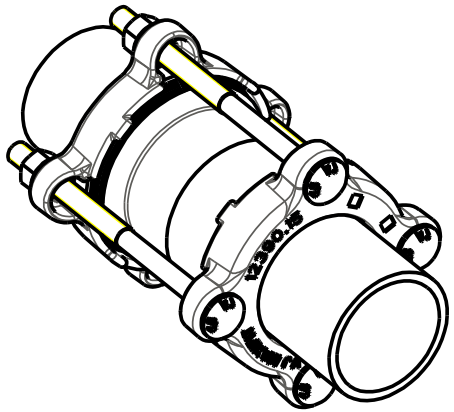

ISOMETRIC VIEW

REFERENCE DRAWING ONLY - NOT TO BE USED FOR INSPECTION PURPOSES. | DO NOT SCALE

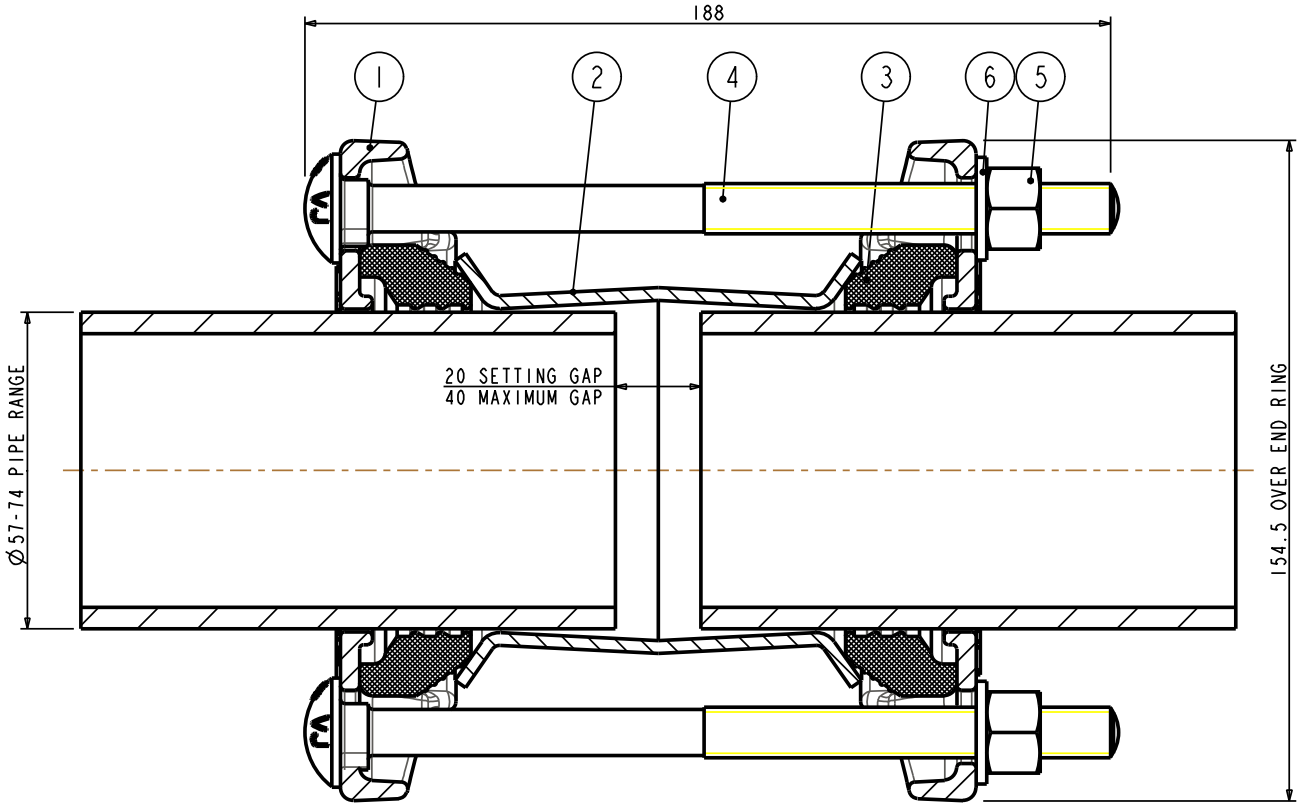

PIPE RANGE	GASKET MOULD	BOLTS	WORKING PRESSURE	TEST PRESSURE	WEIGHT KG	ASSEMBLY DRG NO
57-74	12392_1	4-M12x180	16bar	24bar	2.7	12393_50

OVERALL DIMENSION DRAWING
FOR REFERENCE ONLY
VIKING JOHNSON RESERVE THE
RIGHT TO AMEND DETAILS WITHOUT
PRIOR NOTIFICATION

This drawing is the exclusive property of VIKING JOHNSON and is confidential and must not be reproduced or disclosed to a third party without written consent. It must be used only for the purpose which it has been issued and is returnable on request.

CRANE A Crane Co Company ©

OVERALL DIMENSIONS OF MAXIFIT PLUS COUPLING FOR 57-74mm PIPE RANGE

RELEASE LEVEL: Manufacture | SHEET 1 OF 1

VIKING JOHNSON
World leaders in pipe joints and repair products

DRAWN	P.N.	SCALE	N.T.S.
DATE	04-Jan-06	GENERIC	12393_50

DRG NO 0_DIM_12393_50_1