ALL PRODUCT DIMENSIONS ARE BEFORE COATING

MATERIAL SPECIFICATION

ADAPTOR BODY (Part 1)
Ductile Iron to BS EN1563:2011
SYMBOL EN-GJS-450-10

END RING (Part 2)
Ductile Iron to BS EN1563:2011
SYMBOL EN-GJS-450-10

GASKET (Part 3)
EPDM to BS EN 681-1,TYPE WA,WC
NITRILE to BS EN 681-1,TYPE WA,WC,WG
or BS EN 682,TYPE G

TEE BOLTS (Part 4)
Steel to BS EN ISO 898-1:2009
PROPERTY CLASS 4.8

NUTS (Part 5)
Steel to
BS4190:2001 Grade 4

WASHERS (Part 6)
Stainless Steel to BS1449:PART 2:1983
GRADE 304S15

OTHER COMPATIBLE FLANGE DRILLINGS

3" ANSI150 (16bar max Working Pressure)

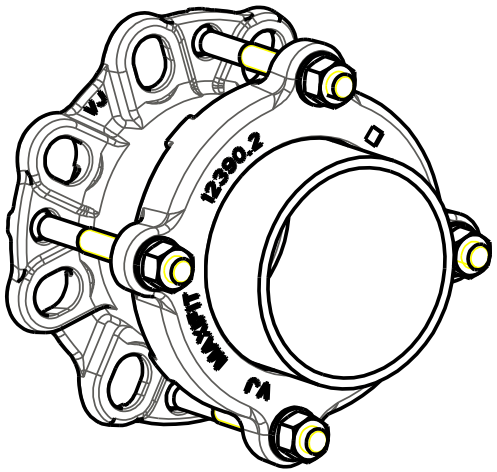

ISOMETRIC VIEW

REFERENCE DRAWING ONLY - NOT TO BE USED FOR INSPECTION PURPOSES. DO NOT SCALE

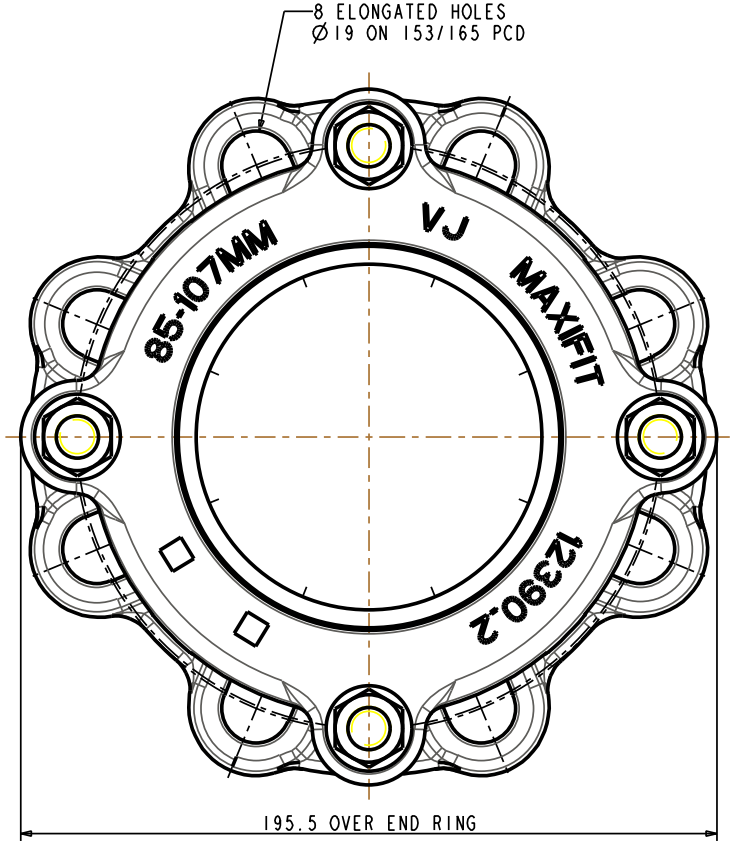

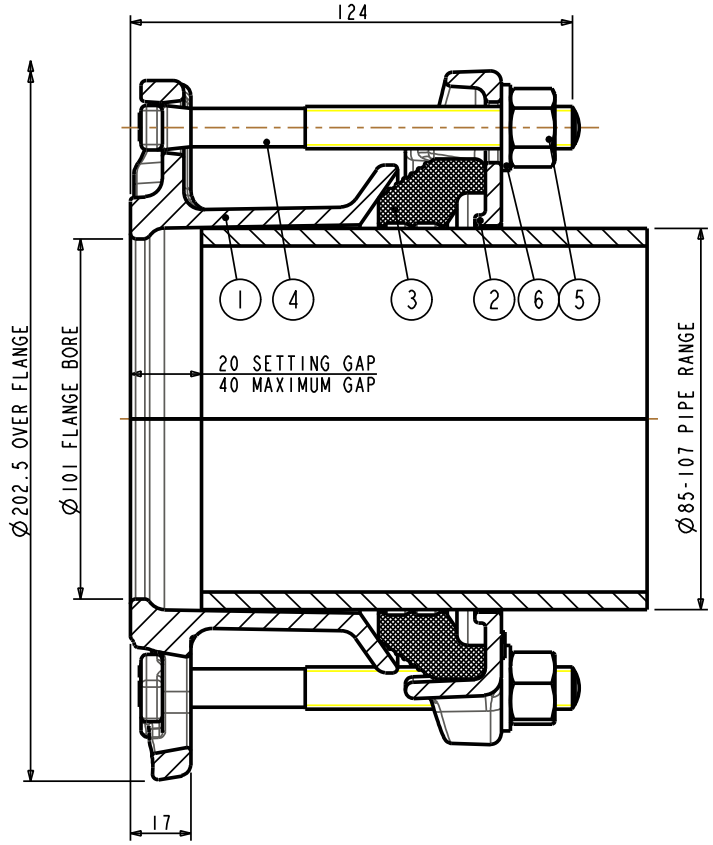

PIPE RANGE	FLANGE DRILLINGS	GASKET MOULD	TEE-BOLTS	WORKING PRESSURE	TEST PRESSURE	WEIGHT KG	ASSEMBLY DRG NO
85-107	80 PN10,16; 3 1/2" TABLE AD; 3 1/2" TABLE E; 3" ANSI125	12392_3	4-M12x115	16bar	24bar	3.7	12419_3

MAXIFIT FLANGE ADAPTORS DO NOT RESIST END LOAD - ADEQUATE RESTRAINT MUST BE PROVIDED

OVERALL DIMENSION DRAWING
FOR REFERENCE ONLY
VIKING JOHNSON RESERVE THE
RIGHT TO AMEND DETAILS WITHOUT
PRIOR NOTIFICATION

This drawing is the exclusive property of VIKING JOHNSON and is confidential and must not be reproduced or disclosed to a third party without written consent. It must be used only for the purpose which it has been issued and is returnable on request.

CRANE A Crane Co Company ©

OVERALL DIMENSIONS OF MAXIFIT FLANGE ADAPTORS FOR 85-107mm PIPE RANGE WITH MULTI FLANGE DRILLING

RELEASE LEVEL: Manufacture SHEET 1 OF 1

VIKING JOHNSON
World leaders in pipe joints and repair products

DRAWN	P.N.	SCALE	N.T.S.
DATE	03-Jan-06	GENERIC	12419_3

DRG NO O_DIM_12419_3_1