ALL PRODUCT DIMENSIONS ARE BEFORE COATING

MATERIAL SPECIFICATION

ADAPTOR BODY (Part 1)
Ductile Iron to BS EN1563:2011
SYMBOL EN-GJS-450-10

END RING (Part 2)
Ductile Iron to BS EN1563:2011
SYMBOL EN-GJS-450-10

GASKET (Part 3)
EPDM to BS EN 681-1,TYPE WA,WC
NITRILE to BS EN 681-1,TYPE WA,WC,WG
or BS EN 682,TYPE G

TEE BOLTS (Part 4)
Steel to BS EN ISO 898-1:2009
PROPERTY CLASS 4.8

NUTS (Part 5)
Steel to
BS4190:2001 Grade 4

WASHERS (Part 6)
Stainless Steel to BS1449:PART 2:1983
GRADE 304S15

OTHER COMPATIBLE FLANGE DRILLINGS

6" ANSI125; 6" ANSI150
(16bat max Working Pressure)

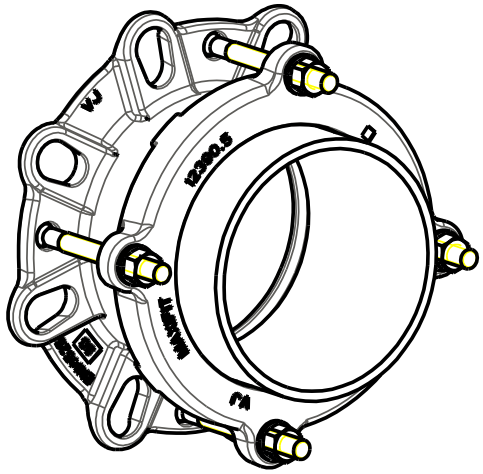

ISOMETRIC VIEW

REFERENCE DRAWING ONLY - NOT TO BE USED FOR INSPECTION PURPOSES. DO NOT SCALE

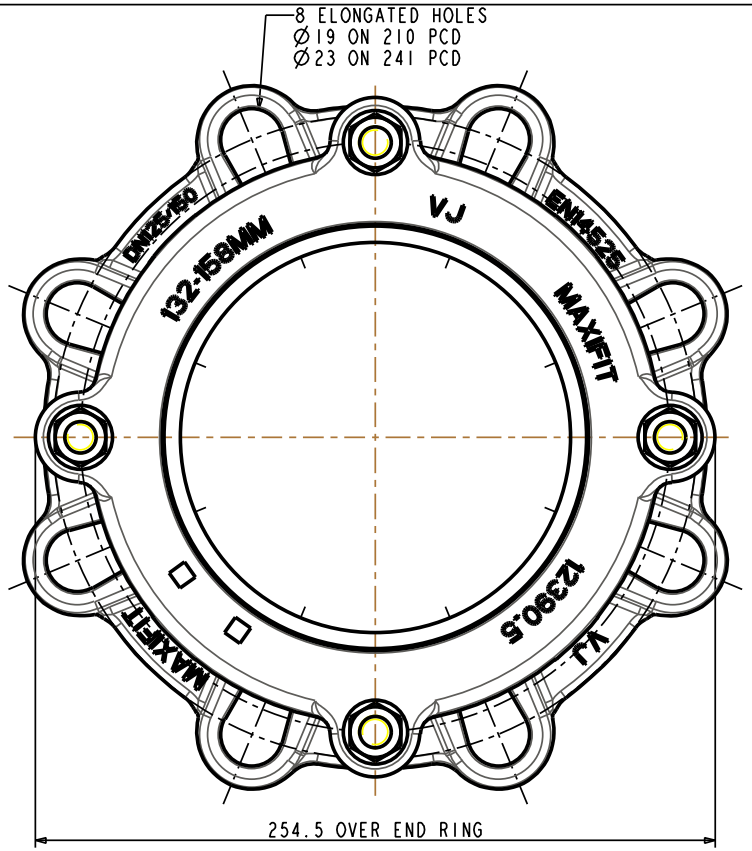

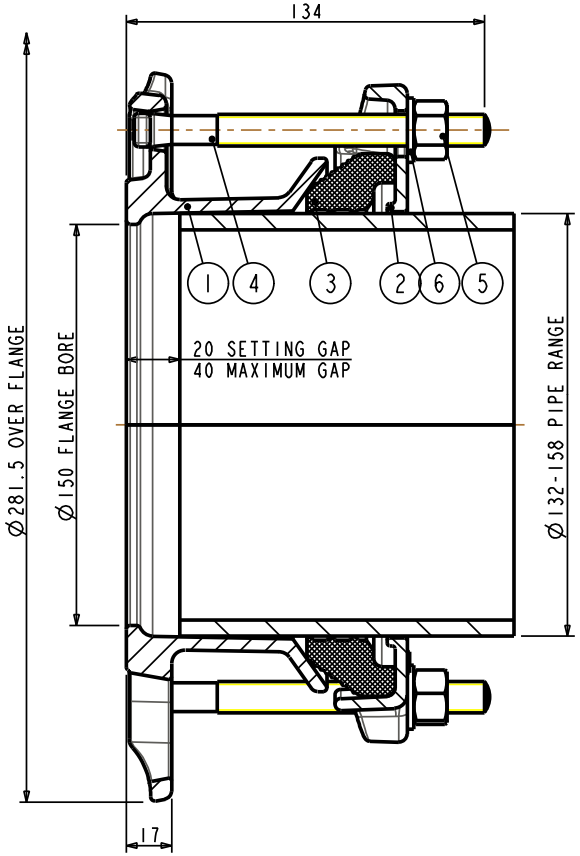

PIPE RANGE	FLANGE DRILLINGS	GASKET MOULD	TEE-BOLTS	WORKING PRESSURE	TEST PRESSURE	WEIGHT KG	ASSEMBLY DRG NO
132-158	125 PN10,16; 150 PN10,16; 5" TABLE A; 5" TABLE DE; 6" TABLE A; 6" TABLE D; 6" TABLE E; 6" AWWA D; 125 AS2129 CD; 150 AS2129 CD; 150 AS4087 16	12392_6	4-M12x125	16bar	24bar	5.6	12419_5

MAXIFIT FLANGE ADAPTORS DO NOT RESIST END LOAD - ADEQUATE RESTRAINT MUST BE PROVIDED

OVERALL DIMENSION DRAWING
FOR REFERENCE ONLY
VIKING JOHNSON RESERVE THE
RIGHT TO AMEND DETAILS WITHOUT
PRIOR NOTIFICATION

This drawing is the exclusive property of VIKING JOHNSON and is confidential and must not be reproduced or disclosed to a third party without written consent. It must be used only for the purpose which it has been issued and is returnable on request.

CRANE A Crane Co Company ©

OVERALL DIMENSIONS OF MAXIFIT FLANGE ADAPTORS FOR 132-158mm PIPE RANGE WITH MULTI FLANGE DRILLING

RELEASE LEVEL: Manufacture SHEET 1 OF 1

VIKING JOHNSON
World leaders in pipe joints and repair products

DRAWN	P.N.	SCALE	N.T.S.
DATE	03-Jan-06	GENERIC	12419_5

DRG NO O_DIM_12419_5_1