ALL PRODUCT DIMENSIONS ARE BEFORE COATING

MATERIAL SPECIFICATION

END RING (Part 1)
Ductile Iron to BS EN1563:1997
SYMBOL EN-GJS-450-10

CENTRE SLEEVE (Part 2)
Ductile Iron to BS EN1563:1997
SYMBOL EN-GJS-450-10

GASKET (Part 3)
EPDM to BS EN 681-1,TYPE WA,WC
NITRILE to BS EN 681-1,TYPE WA,WC,WG
or BS EN 682,TYPE G

BOLTS (Part 4)
Steel to BS EN ISO 898-1:1999
PROPERTY CLASS 4.8

NUTS (Part 5)
Steel to
BS4190:2001 Grade 4

WASHERS (Part 6)
Stainless Steel to BS1449:PART 2:1983
GRADE 304S15

FINISH SPECIFICATION

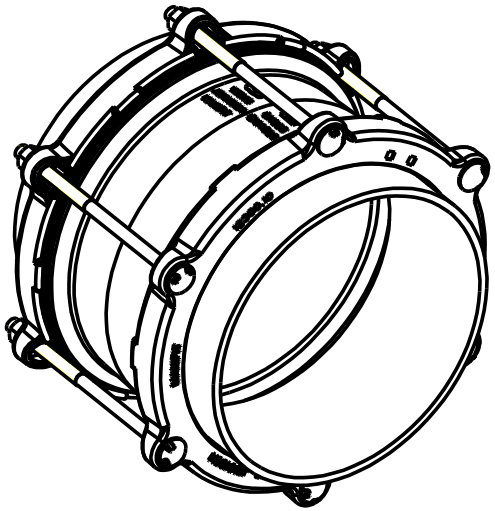

ISOMETRIC VIEW

REFERENCE DRAWING ONLY - NOT TO BE USED FOR INSPECTION PURPOSES. DO NOT SCALE

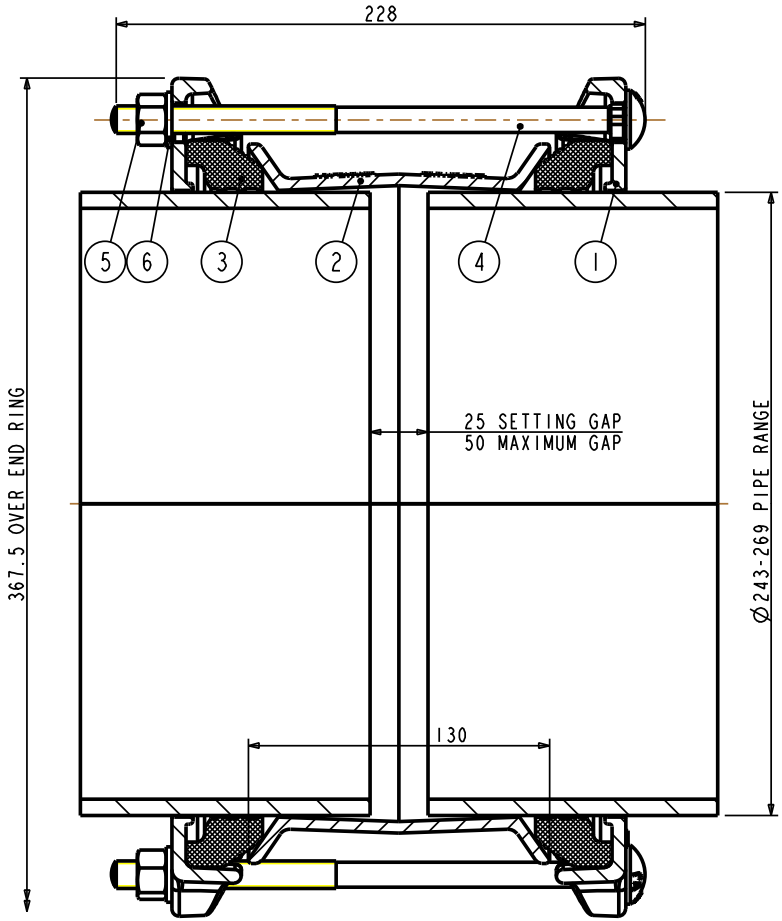

PIPE RANGE	GASKET MOULD	BOLTS	TEST PRESSURE	WEIGHT KG	ASSEMBLY DRG NO
243-269	12392_11	6-M12x220	24bar	12.490	12393_11

OVERALL DIMENSION DRAWING
FOR REFERENCE ONLY
VIKING JOHNSON RESERVE THE
RIGHT TO AMEND DETAILS WITHOUT
PRIOR NOTIFICATION

This drawing is the exclusive property of VIKING JOHNSON and is confidential and must not be reproduced or disclosed to a third party without written consent. It must be used only for the purpose which it has been issued and is returnable on request.

CRANE A Crane Co Company ©

OVERALL DIMENSIONS OF MAXIFIT COUPLING FOR 243-269mm PIPE RANGE

RELEASE LEVEL: Manufacture SHEET 1 OF 1

VIKING JOHNSON
World leaders in pipe joints and repair products

DRAWN	P.N.	SCALE	N.T.S.
DATE	04-Jan-06	GENERIC	12393_11

DRG NO 0_DIM_12393_11_1