ALL PRODUCT DIMENSIONS ARE BEFORE COATING

## MATERIAL SPECIFICATION

FLANGE (Part 1)
STEEL to
BS EN10025-2:2004 GRADE S275JR
END RING (Part 2)
STEEL to
BS EN10025-2:2004 GRADE S275JR
CENTRE SLEEVE (Part 3)
STEEL to
BS EN10025-2:2004 GRADE S355JR
GASKET (Part 4)
RUBBER 70 HARDNESS
Grade to suit service
STUDS (Part 5)
STEEL to
BS EN ISO898-1:1999 PROPERTY CLASS 4.8
NUTS (Part 6)
STEEL to
BS4190:2001 GRADE 4
WASHERS (Part 7)
STAINLESS STEEL to
BS1449:PART 2:1983 GRADE 304S15

## FINISH SPECIFICATION

## NOTES

| STUD TORQUES | | |
|---|---|---|
| PIPE MATERIAL | Nm | lbf ft |
| GRP | 47-60 | 35-45 |
| ALL OTHERS | 95-120 | 70-90 |

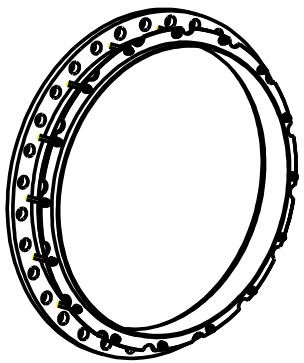

ISOMETRIC VIEW

REFERENCE DRAWING ONLY - NOT TO BE USED FOR INSPECTION PURPOSES

DO NOT SCALE

FOR HARNESSING ARRANGEMENT THIS PRODUCT WILL REQUIRE NOTCHING, AS SHOWN. UN-NOTCHED END RINGS WILL BE SUPPLIED, UNLESS REQUESTED OTHERWISE

| NOTCHING REQUIREMENTS FOR CAST AND DUCTILE IRON PIPE MATERIALS | | | NOTCHING REQUIREMENTS FOR ALL OTHER PIPE MATERIALS | | |
|---|---|---|---|---|---|
| FLANGE HOLES | MINIMUM | CALCULATED MINIMUM | FLANGE HOLES | MINIMUM | CALCULATED MINIMUM |
| ALL FLANGE DRILLINGS | HALF THE NUMBER OF FLANGE HOLES | CALCULATED USING A YIELD OF 725N/mm² | FLANGES WITH 16 HOLES OR LESS | 4 | CALCULATED USING A YIELD OF 725N/mm² |
| | | | FLANGES WITH MORE THAN 16 HOLES | QUARTER THE NUMBER OF FLANGE HOLES | CALCULATED USING A YIELD OF 725N/mm² |

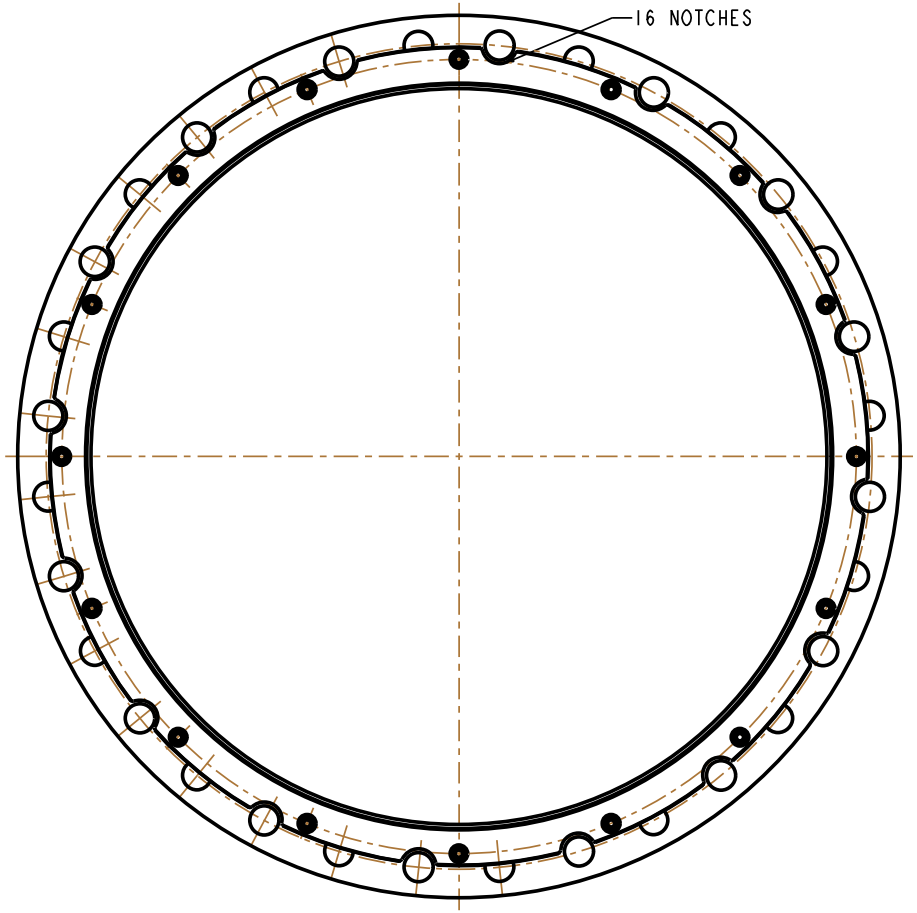


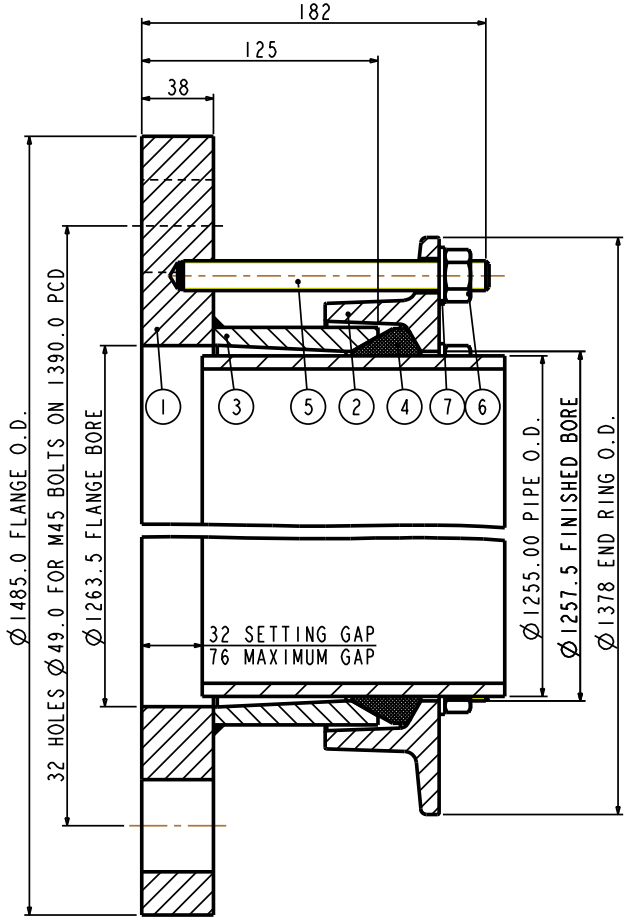


| PIPE O.D. | PIPE MATERIAL | PIPE TOLERANCE + | PIPE TOLERANCE - | FLANGE DRILLING | STUDS NO-SIZE | GASKET MOULD | NO OF NOTCHES | WORKING PRESSURE | TEST PRESSURE | SECTION | WEIGHT KG | ASSEMBLY DRG NO |
|---|---|---|---|---|---|---|---|---|---|---|---|---|
| 1255.00 | DUCTILE IRON | 1.00 | 6.00 | 1200PN16 | 16-M16x160 | J122M | 16 | 16.0bar | 24.0bar | A2E | 197.6 | 6175_101 |

OVERALL DIMENSIONS DRAWING FOR REFERENCE ONLY
VIKING JOHNSON RESERVE THE RIGHT TO AMEND DETAILS WITHOUT PRIOR NOTIFICATION

This drawing is the exclusive property of VIKING JOHNSON and is confidential and must not be reproduced or disclosed to a third party without written consent. It must be used only for the purpose which it has been issued and is returnable on request.

CRANE A Crane Co Company

# OVERALL DIMENSIONS OF VIKING JOHNSON FLANGE ADAPTOR A2E SECTION FOR A 1255.00mm PIPE O.D. WITH A 1200PN16 FLANGE DRILLING

RELEASE LEVEL: Manufacture

SHEET 1 OF 1

VIKING JOHNSON
World leaders in pipe joints and repair products

| DRAWN | AUTO | SCALE | 0.476 |
|---|---|---|---|
| DATE | 21/04/09 | GENERIC | 6175_A2E_ODIMS_1 |

DRG NO SKP694-1