ALL PRODUCT DIMENSIONS ARE BEFORE COATING

REFERENCE DRAWING ONLY - NOT TO BE USED FOR INSPECTION PURPOSES

DO NOT SCALE

MATERIAL SPECIFICATION

FLANGE ADAPTOR (Part 1)
- Ductile Iron to BS EN1563:1997
- Symbol EN-GJS-450-10

END RING (Part 2)
- Ductile Iron to BS EN1563:1997
- Symbol EN-GJS-450-10

CARRIER (Part 3)
- Acetal Co-polymer Grade C2521 or equivalent

GRIPPER (Part 4)
- Acetal Co-polymer Grade C9021 or equivalent

GASKET (Part 5)
- 70 IRHD Moulded Compound
- Grade to suit service

BOLTS (Part 6)
- Stainless Steel to BS EN ISO3506-1:2009
- Grade A2 Property Class 70 or
- Grade A2 Property Class 80 or
- Grade A4 Property Class 70 or
- Grade A4 Property Class 80

NUTS (Part 7)
- Stainless Steel to BS EN ISO3506-2:2009
- Grade A4 Property Class 80

WASHERS (Part 8)
- Stainless Steel to BS1449:Part 2:1983
- Grade 304S15 or
- Stainless Steel to BS EN ISO3506-1:2009
- Grade A2 Property Class 50 or
- Grade A4 Property Class 50 or

'O' SEAL GASKET (Part 9)
- As specified by order

FINISH SPECIFICATION

FLANGE ADAPTOR (Part 1)
- Rilsan Nylon 11

END RING (Part 2)
- Rilsan Nylon 11

BOLTS (Part 6)
- Dry Film Lubricant

NUTS (Part 7)
- Dacromet 500

NOTES

Bolt Torques
- M16 = 95-120Nm

Pipe Materials

Gripping and Non-Gripping (Flex)
- Used without support liner
  - Steel
  - Ductile Iron
  - Cast Iron
  - PVC Class 4 DIN8062
- Used with support liner
  - PE80
  - PE100
  - PVC - all other classes

Non-Gripping (Flex)
- Used without support liner
  - Asbestos Cement

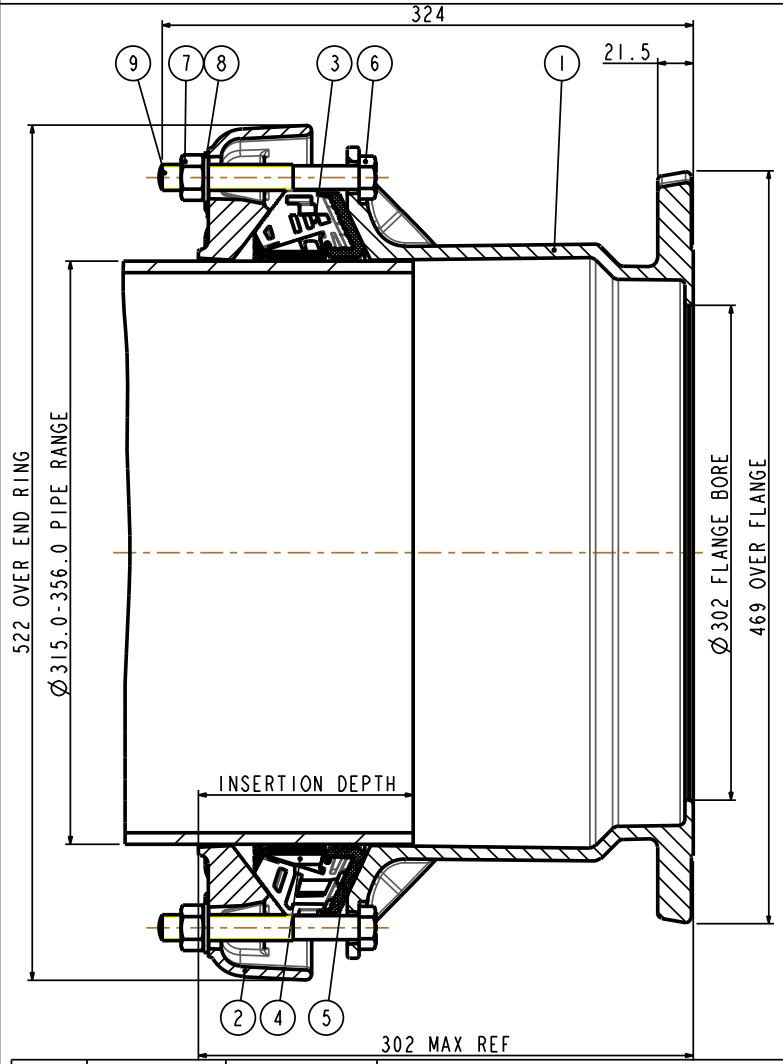

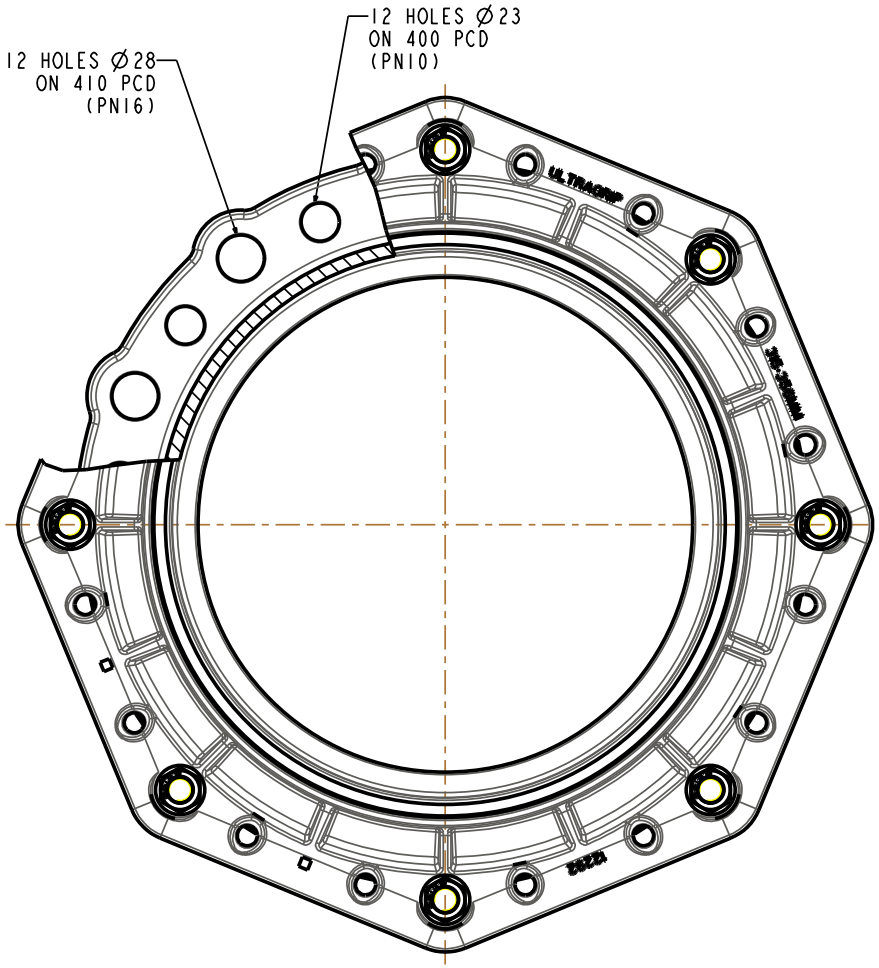

NOM SIZE	PIPE O.D. RANGE	FLANGE DRILLING	WORKING PRESSURE				NO OFF CARRIERS	NO OFF GRIPPERS	GASKET MOULD	BOLTS NO-SIZExLEN	INSERTION DEPTH		WEIGHT KG	ASSEMBLY DRG NO
			WATER		GAS									
			GRIPPING	FLEX	GRIPPING	FLEX					MIN	MAX		
300	315.0-356.0	300 PN10,16	16bar	16bar	5bar	5bar	64	64	13129_4	8-M16x120	125	200	43.7	13199_12

OVERALL DIMENSIONS DRAWING FOR REFERENCE ONLY
VIKING JOHNSON RESERVE THE RIGHT TO AMEND DETAILS WITHOUT PRIOR NOTIFICATION

This drawing is the exclusive property of VIKING JOHNSON and is confidential and must not be reproduced or disclosed to a third party without written consent. It must be used only for the purpose which it has been issued and is returnable on request.

CRANE A Crane Co Company

OVERALL DIMENSIONS OF ULTRAGRIP FLANGE ADAPTOR FOR 315.0-356.0mm O.D. PIPE RANGE WITH 300 PN10,16 FLANGE

RELEASE LEVEL: Concept

SHEET 1 OF 1

VIKING JOHNSON
World leaders in pipe joints and repair products

DRAWN	P.N.	SCALE	0.650
DATE	03-Mar-10	GENERIC	O_DIM_13199_12_2

DRG NO O_DIM_13199_12_2