ALL PRODUCT DIMENSIONS ARE BEFORE COATING

MATERIAL SPECIFICATION

LINER BODY (Part 1)
Ductile Iron to BS EN1563
Symbol EN-GJS-450-10

CLAMP BANDS (Part 2)
Ductile Iron to BS EN1563
Symbol EN-GJS-450-10

BOLTS (Part 3)
Stainless Steel to BS EN ISO3506-1
Grade A2 Property Class 70

NUTS (Part 4)
Stainless Steel to BS EN ISO3506-2
Grade A4 Property Class 80

WASHERS (Part 5)
Stainless Steel to BS EN ISO3506-1
Grade A2 Property Class 50

O RING (Part 6)
As specified by order

NOTES

Maximum Working Pressure = 10bar
Maximum Test Pressure = 16bar

Bolt Torque = 200-210Nm

REFERENCE DRAWING ONLY - NOT TO BE USED FOR INSPECTION PURPOSES. DO NOT SCALE

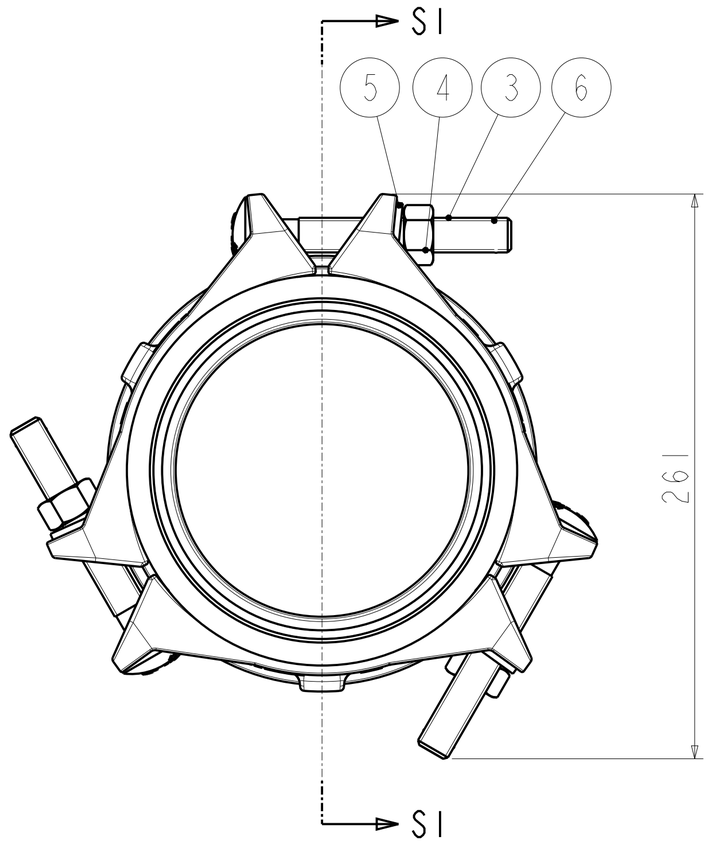

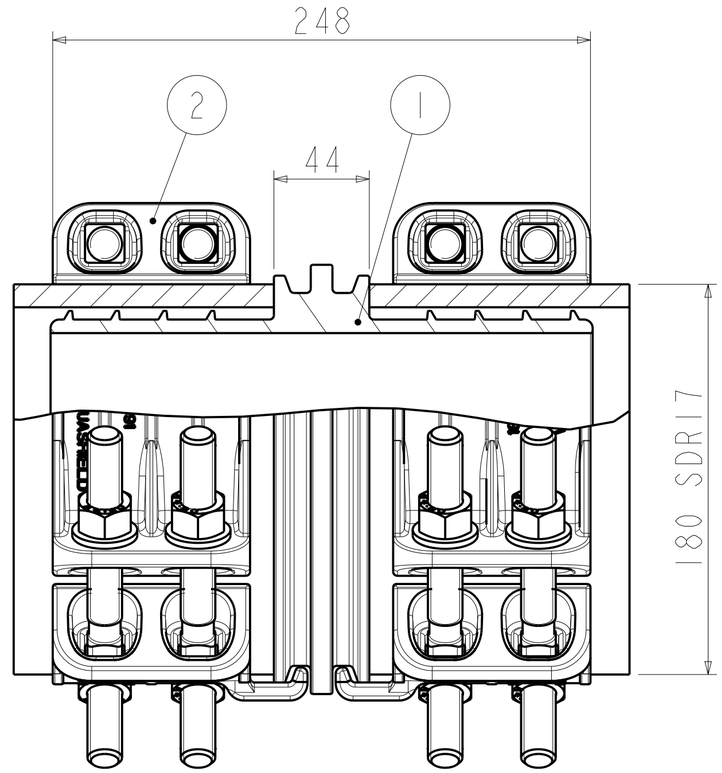

SECTION S1-S1

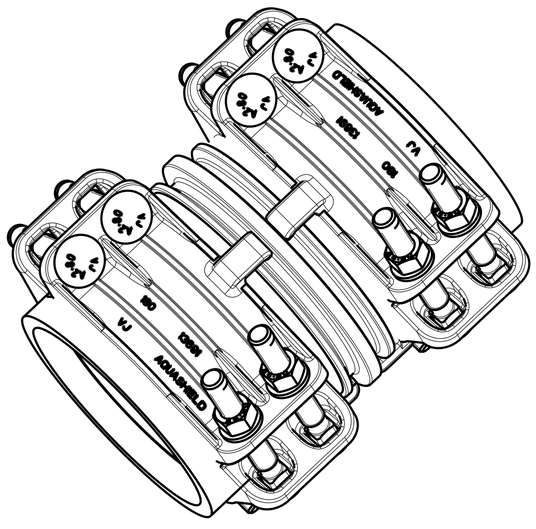

ISOMETRIC VIEW

PIPE OD SDR RATING	BOLT NO-DIAxLENGTH	WEIGHT Kg	ASSEMBLY DRG NO
180 SDR17,17.6	12-M16x120	20.8	13642_6

OVERALL DIMENSION DRAWING FOR REFERENCE ONLY
VIKING JOHNSON RESERVE THE RIGHT TO AMEND DETAILS WITHOUT PRIOR NOTIFICATION

This drawing is the exclusive property of VIKING JOHNSON and is confidential and must not be reproduced or disclosed to a third party without written consent. It must be used only for the purpose which it has been issued and is returnable on request.

CRANE A Crane Co Company ©

OVERALL DIMENSIONS OF AQUASHIELD COUPLINGS FOR 180 SDR17,17.6

RELEASE LEVEL: Released

SHEET 1 OF 1

VIKING JOHNSON
World leaders in pipe joints and repair products

DRAWN	CT	SCALE	1.000
DATE	Aug-10-23	GENERIC	O_DIM_13642_6_

DRG NO O_DIM_13642_6_2